ScanMaster™ Controller

Advanced Laser Positioning & Control
for Laser Steering Systems

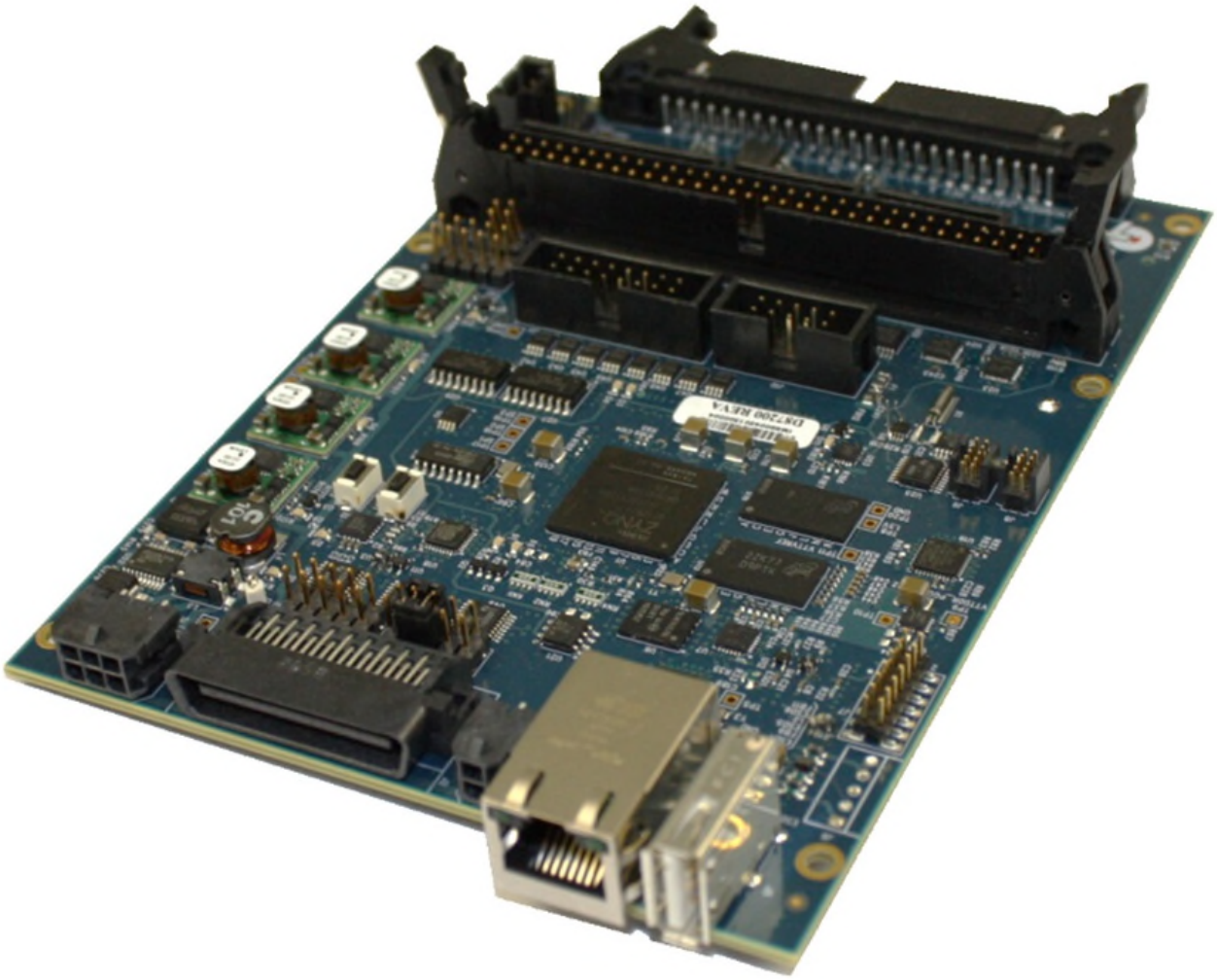

Hardware Reference Manual

Revision A

Cambridge Technology

CAMBRIDGE TECHNOLOGY, INC. GSI Group

Email: ScanControl@cambridgetechnology.com
Web: www.cambridgetechnology.com

ScanMaster is a trademark of Cambridge Technology, Inc.
SMC is a trademark of Cambridge Technology, Inc.

Lit. No. P0900-0168 Rev. A Draft: August 1, 2014
Printed in the U.S.A. © 2014 Cambridge Technology, Inc. All rights reserved.

Table of Contents

1 Introduction 1
1.1 General Notes 1
1.1.1 Purpose 1
1.1.2 Scope 1
1.1.3 Revision History 1
1.2 Obtaining Technical Assistance 1
2 Safety 3
2.1 Safety Labels and Symbols 3
2.2 General Safety Guidelines 3
2.3 Safety/Cautions 4
3 SMC Product Introduction 5
3.1 System Description 5
3.2 Feature Overview 5
3.2.1 Hardware Features 5
3.2.2 Software Features 6
3.3 Technical Specifications 7
4 Installation Requirements/Precautions 11
4.1 Storage and Installation Environment 11
4.2 SMC Module Connector Pinouts 13
4.2.1 Power Signal Pinouts (Connectors J1 and J3) 13
4.2.2 Pendant Debug RS-232 Signal Pinouts (Connector J10) 15
4.2.3 XY2-100 Signal Pinouts (Connector J11) 16
4.2.4 Auxiliary Signal Pinouts (Connector J13) 17
4.2.5 MOTF-1 Signal Pinouts (Connector J14) 21
4.2.6 MOTF-0 Signal Pinouts (Connector J15) 22
4.2.7 Control Signal Pinouts (Connector J16) 23
4.2.8 External Trigger Pinouts (Connector J17) 25
4.2.9 Laser Signal Pinouts (Connector J18) 26
4.2.10 USBA Pinouts (Connector J5) 30
4.2.11 USBB Header Pinouts (Connector J6) 31
4.3 Signal Conditioning 32
4.3.1 Mark-on-the-Fly Inputs for J14 and J15 32
4.3.2 High-speed Laser Synchronization for J18 32
4.3.3 Laser Status 0-5 for J18 33
4.3.4 General Purpose Inputs for J13 and J16 33
4.3.5 System Control Inputs for J13 and J16 34
4.3.6 System Control Outputs and General Purpose Outputs for J13 and J16 34
4.3.7 Laser Control Outputs for J18 35
4.4 XY2-100 Protocol Interface 36
4.4.1 Connections and Signal Descriptions 36
4.4.2 Clock 36
4.4.3 Sync 36
4.4.4 X, Y, & Z Data 37
4.4.5 Status Data 38

© Cambridge Technology 2014

Table of Figures

Figure 1 - SMC Main Module Mechanical Layout ..... **Error! Bookmark not defined.**
Figure 2 - Connectors J1 and J3 (Power) Pinouts 13
Figure 3 - Connector J10 (RS-232) Pinouts 15
Figure 4 - Connector J11 (XY2-100) Pinouts 16
Figure 5 - Connector J13 (Auxiliary) Pinouts 17
Figure 6 - Connector J14 (MOTF-1) Pinouts 21
Figure 7 - Connector J15 (MOTF-0) Pinouts 22
Figure 8 - Connector J16 (Control) Pinouts 23
Figure 9 - Connector J17 (External Trigger) Pinouts 25
Figure 10 - Connector J18 (Laser) Pinouts 26
Figure 11 - Connector JP6 (ESTOP_LOOP) 28
Figure 12 - Connector TP99 (ESTOP2_LOOP) 29
Figure 13 - Connector J5 (USBA Pinouts) 30
Figure 14 - Connector J6 (USBB Header) Pinouts 31
Figure 15 - Signal Conditioning for Mark-on-the-Fly Inputs (J14 and J15) 32
Figure 16 - Signal Conditioning for High-speed Laser Synchronization (J18) 32
Figure 17 - Signal Conditioning for Laser Status 0-5 Signal (J18) 33
Figure 18 - Signal Conditioning for General Purpose Inputs (J13 and J16) 33
Figure 19 - Signal Conditioning for System Control Inputs (J13 and J16) 34
Figure 20 - Signal Conditioning for System Control and General Purpose Outputs (J13 and J16) 34
Figure 21 - Signal Conditioning for Laser Control Outputs (J18) 35
Figure 22 - X2-100 Timing Diagram 37

Table of Tables

Table 1 - Revision History 1
Table 2 - Safety Labels and Symbols 3
Table 3 - Technical Specifications 7
Table 4 - Module Connector Part Number Reference 12
Table 5 - Connector J1 (Power) Signal Descriptions 13
Table 6 - Connector J3 (+24 Signal) Signal Descriptions ..... **Error! Bookmark not defined.**
Table 7 - Connector J10 (RS-232) Signal Descriptions 15
Table 8 - Connector J11 (XY2-100) Signal Descriptions 16
Table 9 - Connector J13 (Auxiliary) Signal Descriptions 17
Table 10 - Connector J14 (MOTF-1) Signal Descriptions 21
Table 11 - Connector J15 (MOTF-0) Signal Descriptions 22
Table 12 - Connector J16 (Control) Signal Descriptions 23
Table 13 - Connector J17 (External Trigger) Signal Descriptions 25
Table 14 - Connector J18 (Laser) Signal Descriptions 26
Table 15 - Connector J5 (ESTOP_LOOP) Signal Descriptions 28
Table 16 - Connector J5 (USBA Header) Signal Descriptions 30
Table 17 - Connector J6 (USBB Header) Signal Descriptions 31
Table 18 - DB-25 Connector to an XY2-100-based Scan Head 36
Table 19 - DB-9 Connector for Differential Power ..... **Error! Bookmark not defined.**
Table 20 - Control Codes 37
Table 21 - Status Data Formats 38

© Cambridge Technology 2014

THIS PAGE IS INTENTIONALLY LEFT BLANK.

1 Introduction

1.1 General Notes

Cambridge Technology reserves the right to make changes to the product covered in this manual to improve performance, reliability or manufacturability.

Although every effort has been made to ensure accuracy of the information contained in this manual, Cambridge Technology assumes no responsibility for inadvertent errors. Contents of the manual are subject to change without notice.

1.1.1 Purpose

This manual provides the following information for the ScanMaster™ Controller (also known as the SMC):

- Product description, installation, operation a troubleshooting

1.1.2 Scope

This manual covers the SMC Board only. For information on the SMC software, please refer to the ScanMaster™ Controller Software Reference Manual (Lit. No. P0900-0169). If the ScanMaster™ Controller Software Reference manual is not available, refer to the EC1000 Software Reference Manual (Lit. No. P0900-0135).

1.1.3 Revision History

The following table shows the Revision History for this document.

Table 1 - Revision History

REVISION	DATE	Changes from previous revision
A Draft	June 18, 2014	First publication of this manual

1.2 Obtaining Technical Assistance

If you encounter a problem:

1. Review all of the information contained in this manual.
2. Consult your own internal people about the issue.
3. If you need further assistance, call Cambridge Technology, Monday through Friday, 9 A.M. until 4:30 P.M. (Eastern Standard Time) at 781-266-5700.

© Cambridge Technology 2014

THIS PAGE IS INTENTIONALLY LEFT BLANK.

2 Safety

Please read all operating instructions completely before installing and using the SMC board.

2.1 Safety Labels and Symbols

The following safety labels and symbols are used throughout the system documentation:

Table 2 - Safety Labels and Symbols

Label	Meaning
	Serious bodily injury or death
	Potential for serious bodily injury
	Potential for property damage and/or minor bodily injury
	SHOCK HAZARD—Electrical voltage is present. Take appropriate measures to protect yourself from electrical shock.
	LASER HAZARD

2.2 General Safety Guidelines

Laser Radiation
Do not stare directly into a laser beam.
Follow all system laser safety requirements during installation and operation.

Laser Radiation
Where practical, Cambridge Technology recommends the use of a shutter to prevent unwarranted emission of laser radiation.

© Cambridge Technology 2014

2.3 Safety/Cautions

WARNING	Use of controls, adjustments, or procedures other than those specified in this manual, without consulting a competent safety professional, may result in component damage, and/or exposure to potential hazards. Always follow established industrial safety practices when operating equipment.
CAUTION	ESD HAZARD! Use appropriate anti-static wrist straps and/or work area equipment to prevent damage to the board electronic components.
CAUTION	Always check your application program BEFORE running it. Errors can cause system damage.
CAUTION	Electronic boards are fragile! Handle and store with care. Protect electronic components from dust, humidity, electromagnetic fields, static electricity, chemicals, and mechanical stress.

3 SMC Product Introduction

3.1 System Description

The SMC is a self-contained controller that provides advanced hardware and software control technology to drive laser scanning systems. The Ethernet-connected SMC board is designed to permit remote embedding and control of a scan-head and laser system. It is capable of controlling two scan-heads with up to three motion axes each with concurrent laser timing control. It also provides integrated synchronization I/O for connection to factory automation equipment.

Connection to a PC for job download and administrative control is made via Ethernet® network using industry standard TCP/IP protocols. In addition to Ethernet connectivity, the SMC provides external USB connections to support job file distribution via industry standard USB Flash disks. RS232 and RS485 Serial I/O is also provided for a pendant-style user interface, laser control, external automation control, and diagnostic access.

In a typical installation, the SMC is a “smart controller” device, which can be installed remotely in a laser scanning system. Positioning vectors are streamed from a networked PC to the SMC, which processes these vectors in real-time and sends them to the laser steering galvo servos as digital signals. Alternatively, the vector stream can originate from a locally stored file in on-board or external USB-based FLASH memory.

There is no requirement to dedicate a full-time host PC to a laser scanning system, as the SMC can process vectors while the PC is used for other purposes. In fact, one PC can support multiple SMC-based scanning systems with no loss in performance. This is due to the large amount of buffer memory available on the controller, the use of a separate supervisory processor on the controller to handle network communication processing, and the complete off-loading of time-critical tasks to a second real-time processor on the SMC.

Direct cabling for scan-head communication to the SMC is possible for both XY2-100-based heads and CTI Lightning-II™ heads. Laser interfacing is done through a standard 0.1” 50-pin IDC ribbon-style connector to laser personality cards or cables that present laser-specific connectorization. Direct connection is also possible with sparsely populated pin-in-shell-style connectors. The laser signals are organized such that an IPG YLP fiber laser with type E interface can be directly connected using a ribbon cable.

I/O signals for automation are presented in a 0.1” 20-pin header for easy access. All I/O signals are also presented in an inter-board transition connector that can be direct-connected to an expansion I/O board. This arrangement permits alternate connector usage and additional signal conditioning options.

3.2 Feature Overview

3.2.1 Hardware Features

- Tethered and stand-alone operation for "embedded" installation in scanning equipment
- Dual processor architecture with integrated 100/1000BaseT Ethernet communication capability
- Real-time processing engine for precise, synchronized scanner movement and laser control
- Fully programmable laser control signals for commonly used lasers
- Direct 24-bit GSBus interface to CTI Lightning-II digital galvo systems
- Standard support of the 16-bit XY2-100 protocol for non Lightning II heads

© Cambridge Technology 2014

- Dual scan-head control via the XY2-100 or GSBus interface
- Software-selectable polarity and timing of six TTL laser control signals
- Two auxiliary analog output channels (12-Bit) 0-10V for control of laser current or pulse intensity
- One 8-Bit TTL digital output port for laser power control
- Four 24V-compatible general purpose digital outputs
- Four 24V-compatible general purpose optically isolated digital inputs
- Seven 24V-compatible dedicated outputs and optically isolated inputs for system control and external equipment synchronization
- One USB socket and one USB header for portable flash disk access
- 4GBytes of on-board Micro SD card flash for storage of firmware, local jobs, and parameters
- 512MB RAM for firmware and job data storage
- One RS232 serial port for general purpose use
- One RS232 serial port for laser control (included in the laser connector)
- One RS485 serial port for smart-controller motion control (included in the AUX connector)
- Two step-and-direction motor control ports (included in the AUX connector)
- Two quadrature encoder inputs for Mark-on-the-fly use

3.2.2 Software Features

The SMC is designed with a client-server architectural model. The SMC implements all required server code functions including identification broadcast, data streaming, command and control communications, and real-time positioning operations. Host-to-module communications uses TCP/IP as a transport mechanism over Ethernet.

To simplify integration with third-party application software, a Microsoft Windows-compatible Application Programming Interface (API) is provided. Two API formats are supported: .NET and Win32 DLL. The APIs take care of all of the network connection requirements and abstract many of the discrete functions of the SMC into higher-level vector-oriented instructions. While a low-level EC1000-compatible XML interface is supported, the recommended interface is Cambridge Technology's high-level ScanMaster API, which provides graphical file importing and advanced shape rendering.

The powerful ScanScript™ embedded scripting language is included as a standard feature, enabling flexible automation integration and local rendering of bar codes, text, and various other shapes. This capability is useful in mark-on-the-fly applications that require real-time rendering of serial numbers and data-matrix codes.

Administrative management tools are also provided to facilitate setup, configuration, and calibration.

3.3 Technical Specifications

Table 3 - Technical Specifications

Category	Feature	Specification	
Galvo control	Axes	XY2-100	3 (X, Y, Z), 1 standard + 1 with optional expansion I/O board
		Lightning-II direct	3 (X, Y, Z) x 2 heads
	Position command output	XY2-100	16-bit (-32768 to +32767) industry standard
		XY2-100 CTI extended	20-bit (-524288 to +524287) for appropriately configured Lightning-II scan heads
		Lightning-II direct GSBus	24-bit (-8388608 to +8388607) Lightning-II compatible protocol
		Dual scan head operation supported using separate correction tables with the same command stream	
	Status sensing	XY2-100	Standard 16-bit status decoding
		XY2-100 CTI extended	Standard plus direct in-position sensing for appropriately configured Lightning-II scan heads
		Lightning-II direct	Real-time servo-produced status and variable monitoring
Laser control	Digital output signals	15, software programmable polarity and timing	
		LASER_ENABLE	Asserted a programmable time prior to a sequence of mark instructions and de-asserted after a programmable period of laser inactivity
		LASER_GATE	Asserted when the laser is active
		LASER_MOD1	Programmable laser modulation or Q-switch pulse stream
		LASER_MOD2	Programmable laser modulation or Q-switch pulse stream, 180 degrees phase shifted from LASER_MOD1
		LASER_MOD3	Programmable laser modulation; used for first pulse suppression or programmable modulation source for synchronous operation
		LASER_POINTER	Laser pointer control signal

© Cambridge Technology 2014

Table 3 - Technical Specifications

Category	Feature	Specification	
		LASER_DATA[7..0]	Digital data representing the laser power setting
		LASER_DATALATCH	Strobe signal asserted when the LASER_DATA[7..0] value changes
	Electrical	5 volt TTL compatible, 32mA source, 64mA sink	
	Resolution	10ns (LASER_GATE, LASER_MOD[3..1])	
	Analog output signals	LASER_ANALOG0	Normally mapped to the laser power setting; can be optionally made independent
		LASER_ANALOG1	Independent setting
	Electrical	0 – 10V, 33 ohm source impedance, 10mA max	
	Digital status input	LASER_STAT[5..0]_ISO	General purpose status read back
	Electrical	Optically isolated, 5 - 24V compatible, 1mA min, 5mA max, 4.7K ohm current limiting provided	
	Digital sync input	LASER_STAT6_ISO	High-speed laser sync input
	Electrical	Optically isolated, 5 – 24V compatible, 5mA min, 15mA max **NOTE:** Current limiting not provided.	
	Serial communication	LASER_RX LASER_TX	RS-232. Provided for configuration and status access to appropriately equipped lasers
Automation interfaces	User inputs	4, programmable polarity and level or edge sensitivity	
		AUX_GPI[3..0]	A marking job may contain an instruction that pauses execution until one of these signals is asserted by external equipment.
	Electrical	Optically isolated, 5 - 24V source or sink, 1mA min, 5mA max, 4.7K ohm current limiting provided	
	User outputs	4, programmable polarity	
		AUX_GPO[3..0]	A marking job instruction may specify the state of any of these signals.
	Electrical	Open-collector, reverse bias protected 1K ohm pull-up to 5V, 24V capable	
	System status	4, optically isolated	

Table 3 - Technical Specifications

Category	Feature	Specification	
		AUX_BUSY	Asserted when a BeginJob instruction is executed, and de-asserted when an EndJob instruction is executed
		AUX_LASING	Asserted when marking is in progress
		AUX_READY	Asserted if an error is detected; un-asserted means system ready.
		AUX_JOBACTIVE	Asserted if a job is active but not necessarily marking yet, e.g. waiting on a trigger input
	Electrical	Open-collector, reverse bias protected 1K ohm pull-up to 5V, 24V capable	
	System synchronization	3, optically isolated	
		AUX_START	A marking job may contain an instruction that pauses execution until this signal is asserted by external equipment. Note that this function can also be achieved using the AUX_GPI[3..0] and START signals.
		AUX_RESET	Causes the card to execute a soft reset forcing a complete re-initialization of the firmware
		AUX_ABORT	Causes the job execution control logic to abort the current job and return to an idle state; useful upon detection of an interlock break
	Electrical	Optically isolated, 5 - 24V source or sink, 1mA min, 5mA max, 4.7K ohm current limiting provided	
		START	A marking job may contain an instruction that pauses execution until this signal is asserted by external equipment. Note that this function can also be achieved using the AUX_START and AUX_GPI[3..0] signals.
	Electrical	Optically isolated, 5V sink only	
Automation	Conveyor tracking	2 channels, digital quadrature input (A & B phases per channel)	

© Cambridge Technology 2014

Table 3 - Technical Specifications

Category	Feature	Specification	
interfaces, continued		AUX_AMOTF[1..0]_DP AUX_BMOTF[1..0]_DN	• Used for tracking objects in motion and automatically compensating for that motion while marking • Also known as marking-on-the-fly • Compensation can be software configured to be applied to either the X- or Y-axis
	Electrical	RS-422 differential, 110 ohm termination, optional 887 ohm pullup/down resistors on the negative differential input to support TTL encoders	
	Smart stepper motor	AUX_TX1_{DP, DN) AUX_RX1_{DP, DN)	Access to a differential serial port interface for smart-stepper motor controllers is provided through the Auxiliary interface connector.
	Electrical	RS-485, 110 ohm input termination	
Safety	Interlock	2 inputs. Laser interlock signals are passed through the laser interface connector and made accessible on the main board through a separate connector. The connector is optionally configurable to provide a default interlock assertion as required by an attached laser. Signals are not actively monitored.	
Communication	Ethernet	100/1000 BaseT compatible	
	Serial Ports	1 RS-232, RTS/CTS interface capable, reserved for future smart touch-panel user interface access 1 RS-232, RTS/CTS interface capable, for general use (included in the AUX connector) 1 RS-232, Rx/Tx only, for serial communication to a laser (included in the laser connector) 1 RS-485, Rx/Tx only, for smart-stepper controller access	
Peripherals	USB	1 USB 2.0 host port for access to external Flash memory disks or other peripherals 1 USB 2.0 header for remote location of USB connector	
Electrical	DC Power	+15 - 48 volts, 6W. Attached USB devices may add an additional 5W consumption Optional 24V for optical isolation circuits	
Mechanical	Length x Width	6.0” x 4.2”	
	Mounting holes	6, 0.125” diameter, see outline drawing for locations	

4 Installation Requirements/Precautions

4.1 Storage and Installation Environment

⚠ CAUTION ⚠	ESD HAZARD! Use appropriate anti-static wrist straps and/or work area equipment to prevent damage to the board electronic components.

Protect the SMC from mechanical stress, humidity, dust, and thermal damage. Storage temperature is -20° C to +60° C. Operating temperature is 15 to 40° C.

The SMC is designed for installation in or near a marking head. Remote connection/programming and download control is achieved via an Ethernet connection.

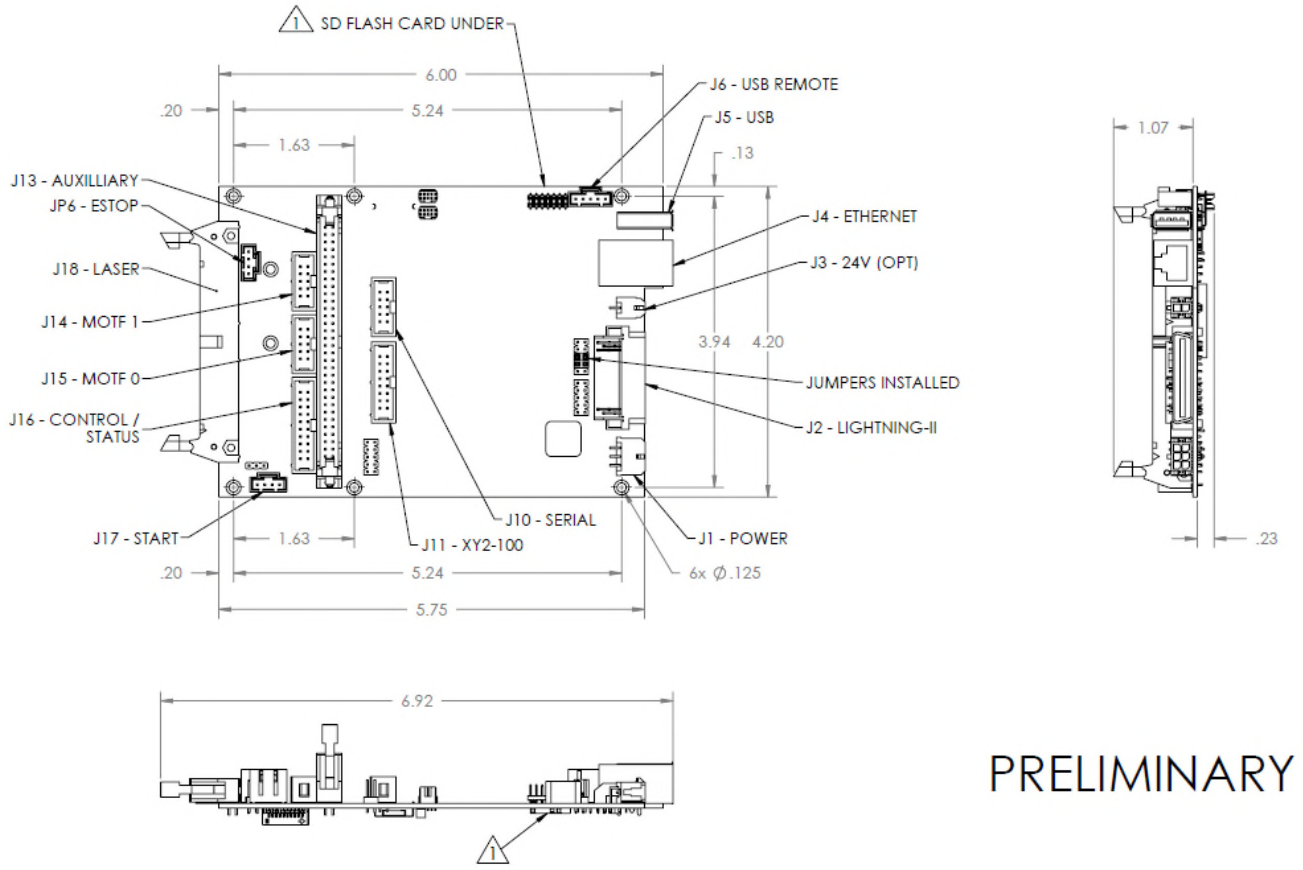

Figure 1 - SMC Main Module Mechanical Layout

© Cambridge Technology 2014

Table 4 - SMC Connector Part Number Reference

SMC Board Connector	Purpose	Style Pin spacing: Rows X Cols	Mfg.	Board Connector Part Number	Mating Cable or Connector/Pins
J1	Input power	3mm : 2 X 3	Molex	43045-0602	
J2	Lightning-II GSBus	0.050” : 2 X 20	Molex	71661-2040	
J3	24V Opto Power	2mm : 2 X 1	Molex	43045-0202	
J4	Ethernet	RJ-45	Stewart	SI-51005-F	CAT-5 Ethernet Cable
J5	USB	USB Type A	FCI	73725-0110BLF	USB 2.0 Cable
J6	USB Remote	0.1” : 1 x 5	Molex	22-23-2051	
J10	Serial Port	0.1” : 2 X 5	3M	30310-6002HB	
J11	XY2-100	0.1” : 2 X 8	3M	30316-6002HB	
J13	AUX I/O	0.1” : 2 X 32	3M	N3764-6302RB	
J14	MOTF1	0.1” : 2 X 5	3M	30310-6002HB	
J15	MOTF0	0.1” : 2 X 5	3M	30310-6002HB	
J16	Control/Status	0.1” : 2 X 10	3M	30320-6002HB	
J17	Start	0.1” : 1 X 4	3M	705-43-0003	
JP6	Estop	0.1” : 1 X 4	3M	705-43-0003	

4.2 SMC Module Connector Pinouts

This section contains pinout drawings and connectivity details for the SMC Board.

Note: In the following tables, each pin number in blue font (e.g., 2) is a hyperlink. Click on a pin number to go to the signal conditioning diagram for that pin. (Pin numbers that appear in black font (e.g., 2) are *not* hyperlinks.)

4.2.1 Power Signal Pinouts (Connectors J1 and J3)

The following figure contains the pinout drawing for Connector J1 and Connector J3 (Power Signals).
The differential voltage between V+ and V- must be in the range of 15 – 48V.
The +24V input is optional and is designed to conveniently supply digital I/O optical isolators on the expansion I/O board.

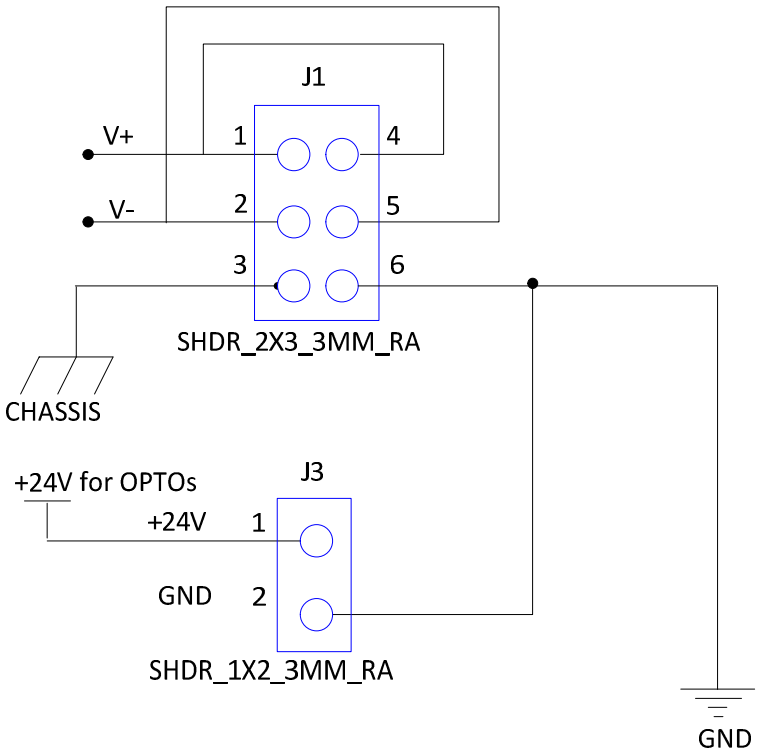

Figure 2 - Connectors J1 and J3 (Power) Pinouts

The following tables contain full descriptions of the signals on the J1 Connector and the J3 Connector.

Table 5 - Connector J1 (Power) Signal Descriptions

Pins 1 – 3	Pins 4 – 6
V+ 15-48 Volts referenced to V- — 1	4 — V+ 15-48 Volts referenced to V-

© Cambridge Technology 2014

Table 5 - Connector J1 (Power) Signal Descriptions

Pins 1 – 3	Pins 4 – 6
V- Return for V+ — 2 **Note:** This pin and Pin 6 (GND) should be at the same voltage level.	5 — V- Return for V+
CHASSIS Expected to be tied to earth ground — 3	6 — GND Digital ground reference **Note:** This pin and Pin 2 (V-) should be at the same voltage level.

Table 6 - Connector J3 (+24 Signal) Signal Descriptions

Pins 1 – 2
+24V Customer optical isolator supply — 1
GND Digital ground reference — 2

4.2.2 Serial RS-232 Signal Pinouts (Connector J10)

The following figure contains the pinout drawing for Connector J10 (RS-232).

Note: This pinout does not match the 10-pin serial header pinout of all PC motherboards.

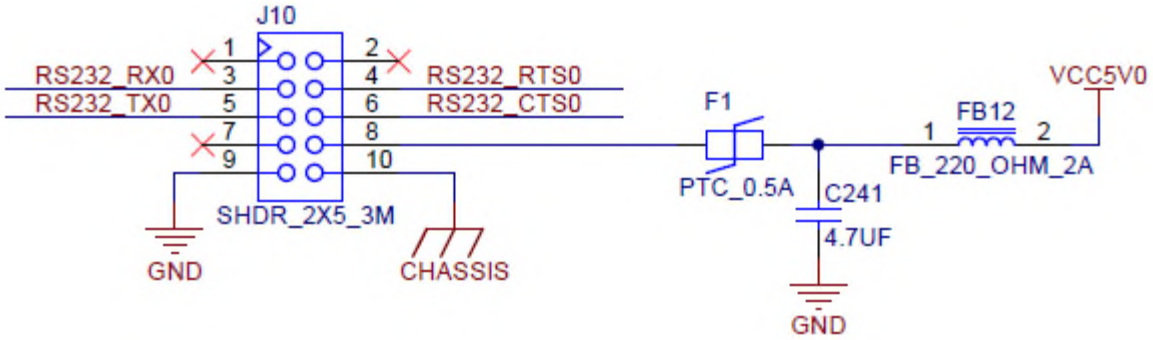

Figure 3 - Connector J10 (RS-232) Pinouts

The following table contains a full description of the signal for each pin in the J10 Connector.

Table 7 - Connector J10 (RS-232) Signal Descriptions

Odd-numbered Pins (1 – 9)	Even-numbered Pins (2 – 10)
N/C Reserved for future use — 1	2 — N/C Reserved for future use
RS232_RX0 Data input from connected device — 3	4 — RS232_RTS0 Request to send to connected device
RS232_TX0 Data output to connected device — 5	6 — RS232_CTS0 Clear to send from connected device
N/C Reserved for future use — 7	8 — VCC5V0 Fused 5V
GND Digital ground reference — 9	10 — CHASSIS Expected to be tied to earth ground

© Cambridge Technology 2014

4.2.3 XY2-100 Signal Pinouts (Connector J11)

The following figure contains the pinout drawing for Connector J11 (XY2-100).

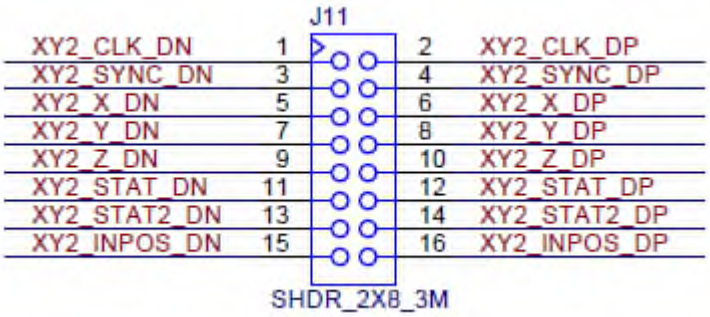

Figure 4 - Connector J11 (XY2-100) Pinouts

The following table contains a full description of the signal for each pin in the J11 Connector.

Table 8 - Connector J11 (XY2-100) Signal Descriptions

Odd-numbered Pins (1 – 15)	Even-numbered Pins (2 – 16)
XY2_CLK_DN 2MHz Clock - negative — 1	2 — XY2_CLK_DP 2MHz Clock - positive
XY2_SYNC_DN Frame sync - negative — 3	4 — XY2_SYNC_DP Frame sync - positive
XY2_X_DN X Data - negative — 5	6 — XY2_X_DP X Data - positive
XY2_Y_DN Y Data - negative — 7	8 — XY2_Y_DP Y Data - positive
XY2_Z_DN Z Data - negative — 9	10 — XY2_Z_DP Z Data - positive
XY2_STAT_DN Status Data - negative — 11	12 — XY2_STAT_DP Status Data - positive
XY2_STAT2_DN Status 2 Data – negative (Reserved) — 13	14 — XY2_STAT2_DP Status 2 Data – positive (Reserved)
XY2_INPOS_DN In position – negative (Lightning-II) — 15	16 — XY2_INPOS_DP In position – positive (Lightning-II)

4.2.4 Auxiliary Signal Pinouts (Connector J13)

The following figure contains the pinout drawing for Connector J13 (Auxiliary).

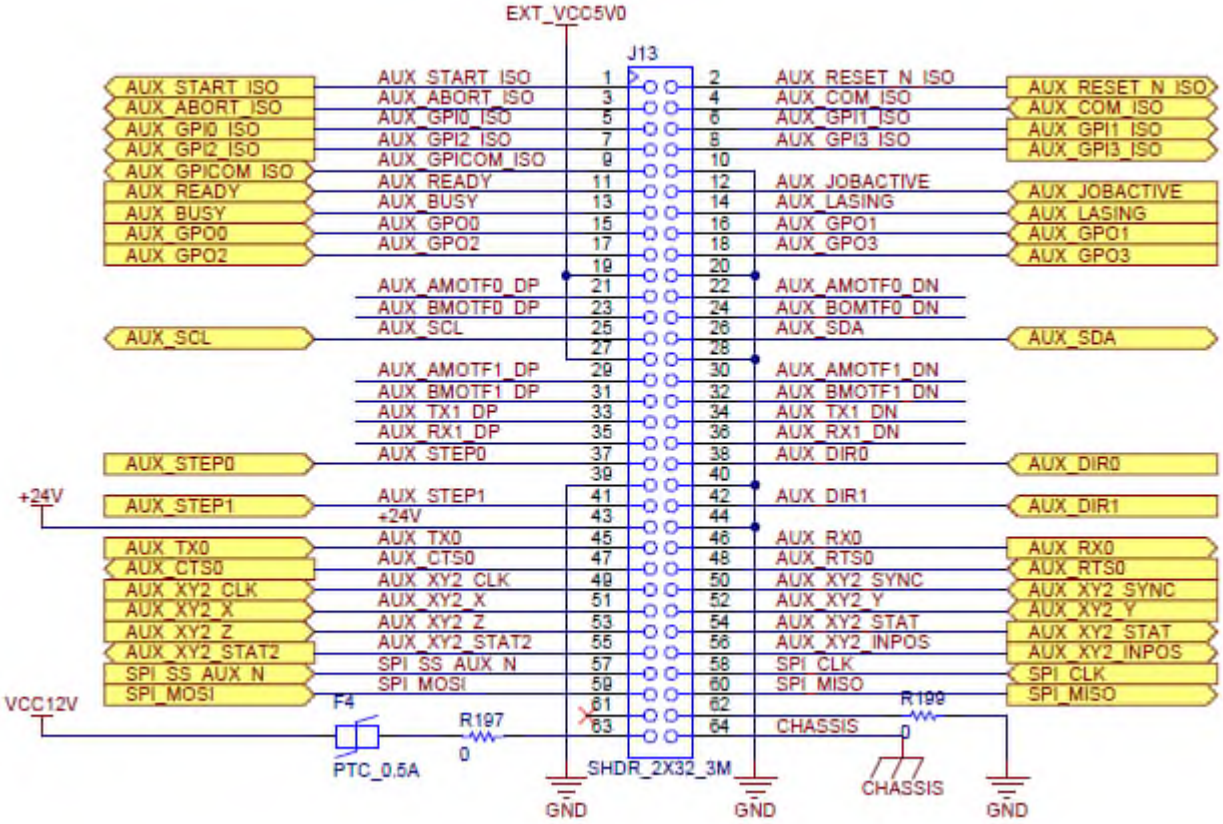

Figure 5 - Connector J13 (Auxiliary) Pinouts

The following table contains a full description of the signal for each pin in the J13 Connector.

Table 9 - Connector J13 (Auxiliary) Signal Descriptions

Odd-numbered Pins (1 – 63)	Even-numbered Pins (2 – 64)
AUX_START_ISO A marking job may contain an instruction that pauses execution until this signal is asserted by external equipment. **Note:** This function can also be achieved using the AUX_START and START signals. (1)	(2) AUX_RESET_N_ISO Causes the card to execute a soft reset forcing a complete re-initialization of the firmware.
AUX_ABORT_ISO Causes the job execution control logic to abort the current job and return to an idle state. **Note:** This signal is useful upon detection of an interlock break. (3)	(4) AUX_COM_ISO Optical isolator common for signals AUX_START_ISO, AUX_RESET_N_ISO, and AUX_ABORT_ISO

© Cambridge Technology 2014

Table 9 - Connector J13 (Auxiliary) Signal Descriptions

Odd-numbered Pins (1 – 63)		Even-numbered Pins (2 – 64)	
AUX_GPI0_ISO A marking job may contain an instruction that pauses execution until this signal is asserted by external equipment.	5	6	AUX_GPI1_ISO A marking job may contain an instruction that pauses execution until this signal is asserted by external equipment.
AUX_GPI2_ISO A marking job may contain an instruction that pauses execution until this signal is asserted by external equipment.	7	8	AUX_GPI3_ISO A marking job may contain an instruction that pauses execution until this signal is asserted by external equipment.
AUX_GPICOM_ISO Optical isolator common for signals AUX_GPI{0-3}_ISO	9	10	GND Digital ground reference
AUX_READY Indicates that system is booted up and ready for normal operation.	11	12	AUX_JOBACTIVE Asserted if a job is active but not necessarily marking yet (e.g., waiting on a trigger input).
AUX_BUSY Asserted when a BeginJob instruction is executed; de-asserted when an EndJob instruction is executed.	13	14	AUX_LASING Asserted when marking is in progress. It is de-asserted when an EndJob instruction is executed.
AUX_GPO0 A marking job WriteDigital instruction may specify the state of this signal.	15	16	AUX_GPO1 A marking job WriteDigital instruction may specify the state of this signal.
AUX_GPO2 A marking job WriteDigital instruction may specify the state of this signal.	17	18	AUX_GPO3 A marking job WriteDigital instruction may specify the state of this signal.
EXT-VCC5V0 Fused 5 Volts available for logic on an expansion I/O board	19	20	GND Digital ground reference
AUX_AMOTF0_DP Primary mark-on-the-fly encoder input. Expected to be connected to an RS485 positive “A” phase differential signal or a 5V TTL signal.	21	22	AUX_AMOTF0_DN Primary mark-on-the-fly encoder input. Expected to be connected to an RS485 negative “A” phase differential signal.
AUX_BMOTF0_DP Primary mark-on-the-fly encoder input. Expected to be connected to an RS485 positive “B” phase differential signal or a 5V TTL signal.	23	24	AUX_BMOTF0_DN Primary mark-on-the-fly encoder input. Expected to be connected to an RS485 negative “B” phase differential signal.
AUX_SCL Reserved for future use	25	26	AUX_SDA Reserved for future use
EXT-VCC5V0 Fused 5 Volts available for logic on an expansion I/O board	27	28	GND Digital ground reference

Table 9 - Connector J13 (Auxiliary) Signal Descriptions

Odd-numbered Pins (1 – 63)	Even-numbered Pins (2 – 64)
AUX_AMOTF1_DP Secondary mark-on-the-fly encoder input. Expected to be connected to an RS485 positive “A” phase differential signal or a 5V TTL signal. — 29	30 — AUX_AMOTF1_DN Secondary mark-on-the-fly encoder input. Expected to be connected to an RS485 negative “A” phase differential signal.
AUX_BMOTF1_DP Secondary mark-on-the-fly encoder input. Expected to be connected to an RS485 positive “B” phase differential signal or a 5V TTL signal. — 31	32 — AUX_BMOTF1_DN Secondary mark-on-the-fly encoder input. Expected to be connected to an RS485 negative “B” phase differential signal.
AUX_TX1_DP Differential RS485 serial transmit data to smart-stepper motor controllers - positive — 33	34 — AUX_TX1_DN Differential RS485 serial transmit data to smart-stepper motor controllers - negative
AUX_RX1_DP Differential RS485 serial receive data from smart-stepper motor controllers - positive — 35	36 — AUX_RX1_DN Differential RS485 serial receive data from smart-stepper motor controllers - negative
AUX_STEP0 Step control signal for a programmable stepper motor — 37	38 — AUX_DIR0 Direction control signal for a programmable stepper motor
GND Digital ground reference — 39	40 — GND Digital ground reference
AUX_STEP1 Step control signal for a programmable stepper motor — 41	42 — AUX_DIR1 Direction control signal for a programmable stepper motor
+24V Customer-supplied optical isolator voltage. Same as J3 pin 1 — 43	44 — GND Digital ground reference
AUX_TX0 Differential serial port interface for smart-stepper motor controllers — 45	46 — AUX_RX0 Differential serial port interface for smart-stepper motor controllers
AUX_CTS0 Serial port Clear to Send (input). — 47	48 — AUX_RTS0 Serial port Request to Send (output).
AUX_XY2_CLK Port 2 XY2-100 Clock **Note:** Before use with a scan head this signal must be signal conditioned with differential drivers and receivers. — 49	50 — AUX_XY2_SYNC Port 2 XY2-100 Sync **Note:** Before use with a scan head this signal must be signal conditioned with differential drivers and receivers.
AUX_XY2_X Port 2 XY2-100 X Data **Note:** Before use with a scan head this signal must be signal conditioned with differential drivers and receivers. — 51	52 — AUX_XY2_Y Port 2 XY2-100 Y Data **Note:** Before use with a scan head this signal must be signal conditioned with differential drivers and receivers.

© Cambridge Technology 2014

Table 9 - Connector J13 (Auxiliary) Signal Descriptions

Odd-numbered Pins (1 – 63)	Even-numbered Pins (2 – 64)
AUX_XY2_Z Port 2 XY2-100 Z Data **Note:** Before use with a scan head this signal must be signal conditioned with differential drivers and receivers. — 53	54 — AUX_XY2_STAT Port 2 XY2-100 Status **Note:** Before use with a scan head this signal must be signal conditioned with differential drivers and receivers.
AUX_XY2_STAT2 Port 2 XY2-100 Status 2 (reserved) **Note:** Before use with a scan head this signal must be signal conditioned with differential drivers and receivers. — 55	56 — AUX_XY2_INPOS Port 2 XY2-100 In Position **Note:** Before use with a scan head this signal must be signal conditioned with differential drivers and receivers.
SPI_SS_AUX_N Reserved for future use — 57	58 — SPI_CLK Reserved for future use
SPI_MOSI Reserved for future use — 59	60 — SPI_MISO Reserved for future use
N/C Reserved for future use — 61	62 — GND Digital ground reference
VCC12V 12V source for use with analog circuitry — 63	64 — CHASSIS Expected to be tied to earth ground

4.2.5 MOTF-1 Signal Pinouts (Connector J14)

The following figure contains the pinout drawing for Connector J14 (MOTF-1).

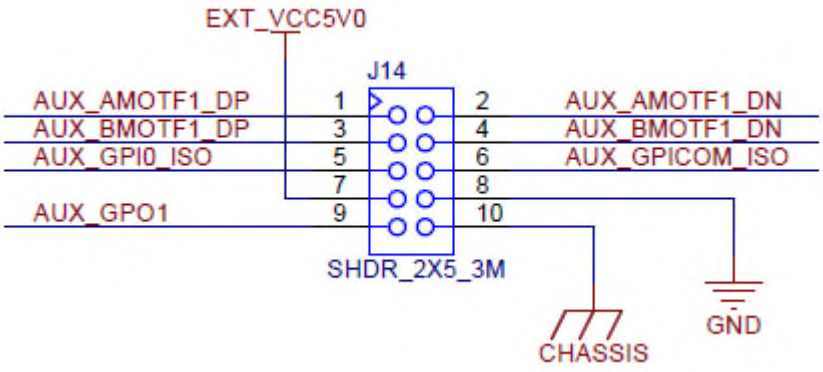

Figure 6 - Connector J14 (MOTF-1) Pinouts

The following table contains a full description of the signal for each pin in the J14 Connector. These signals are replicated from the Auxiliary I/O connector J13.

Table 10 - Connector J14 (MOTF-1) Signal Descriptions

Odd-numbered Pins (1 –9)	Even-numbered Pins (2 – 10)
AUX_AMOTF1_DP Secondary mark-on-the-fly encoder input. Expected to be connected to an RS485 positive “A” phase differential signal or a 5V TTL signal. (1)	(2) AUX_AMOTF1_DN Secondary mark-on-the-fly encoder input. Expected to be connected to an RS485 negative “A” phase differential signal.
AUX_BMOTF1_DP Secondary mark-on-the-fly encoder input. Expected to be connected to an RS485 positive “B” phase differential signal or a 5V TTL signal. (3)	(4) AUX_BMOTF1_DN Secondary mark-on-the-fly encoder input. Expected to be connected to an RS485 negative “B” phase differential signal.
AUX_GPI0_ISO External trigger input. (5)	(6) AUX_GPICOM_ISO Isolator common for General Purpose inputs
EXT_VCC5V0 5 Volts available for encoder power (7)	(8) GND Digital ground reference
AUX_GPO1 A marking job may contain an instruction that pauses execution until this signal is asserted by external equipment. (9)	(10) CHASSIS Expected to be tied to earth ground

© Cambridge Technology 2014

4.2.6 MOTF-0 Signal Pinouts (Connector J15)

The following figure contains the pinout drawing for Connector J15 (MOTF-0).

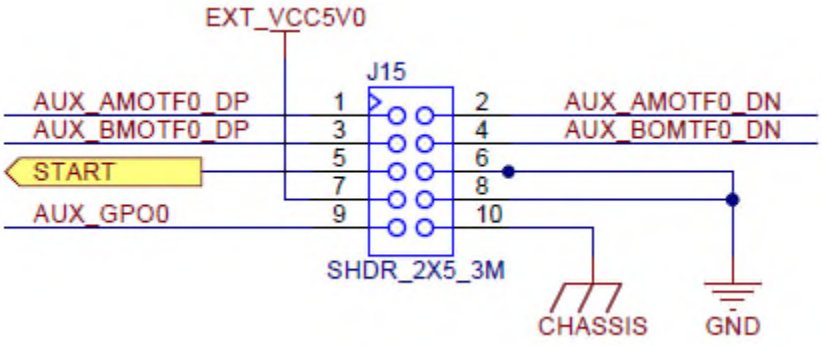

Figure 7 - Connector J15 (MOTF-0) Pinouts

The following table contains a full description of the signal for each pin in the J15 Connector. These signals are replicated from the Auxiliary I/O connector J13.

Table 11 - Connector J15 (MOTF-0) Signal Descriptions

Odd-numbered Pins (1 –9)	Even-numbered Pins (2 – 10)
AUX_AMOTF0_DP Primary mark-on-the-fly encoder input. Expected to be connected to an RS485 positive “A” phase differential signal or a 5V TTL signal. (1)	(2) AUX_AMOTF0_DN Primary mark-on-the-fly encoder input. Expected to be connected to an RS485 negative “A” phase differential signal.
AUX_BMOTF0_DP Primary mark-on-the-fly encoder input. Expected to be connected to an RS485 positive “B” phase differential signal or a 5V TTL signal. (3)	(4) AUX_BMOTF0_DN Primary mark-on-the-fly encoder input. Expected to be connected to an RS485 negative “B” phase differential signal.
START External trigger input **Note:** This function can also be achieved using the AUX_START_ISO and AUX_START signals. (5)	(6) GND Digital ground reference
EXT_VCC5V0 5 Volts available for encoder power (7)	(8) GND Digital ground reference
AUX_GPO0 General purpose output (9)	(10) CHASSIS Expected to be tied to earth ground

4.2.7 Control Signal Pinouts (Connector J16)

The following figure contains the pinout drawing for Connector J16 (Control Signals).

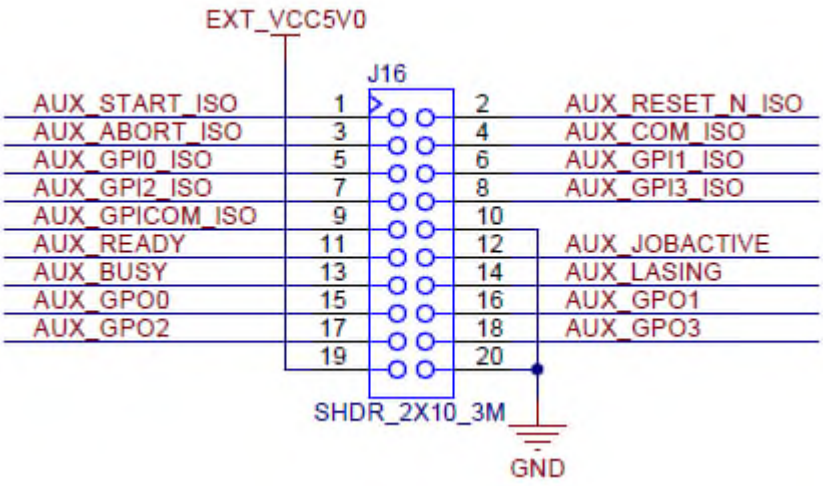

Figure 8 - Connector J16 (Control) Pinouts

The following table contains a full description of the signal for each pin in the J16 Connector.

Table 12 - Connector J16 (Control) Signal Descriptions

Odd-numbered Pins (1 – 19)	Even-numbered Pins (2 – 20)
AUX_START_ISO A marking job may contain an instruction that pauses execution until this signal is asserted by external equipment. **Note:** This function can also be achieved using the AUX_START and START signals. — 1	2 — AUX_RESET_N_ISO Causes the card to execute a soft reset forcing a complete re-initialization of the firmware.
AUX_ABORT_ISO Causes the job execution control logic to abort the current job and return to an idle state. **Note:** This signal is useful upon detection of an interlock break. — 3	4 — AUX_COM_ISO Optical isolator common for signals AUX_START_ISO, AUX_RESET_N_ISO, and AUX_ABORT_ISO
AUX_GPI0_ISO A marking job may contain an instruction that pauses execution until this signal is asserted by external equipment. — 5	6 — AUX_GPI1_ISO A marking job may contain an instruction that pauses execution until this signal is asserted by external equipment.
AUX_GPI2_ISO A marking job may contain an instruction that pauses execution until this signal is asserted by external equipment. — 7	8 — AUX_GPI3_ISO A marking job may contain an instruction that pauses execution until this signal is asserted by external equipment.
AUX_GPICOM_ISO Isolator common for General Purpose inputs — 9	10 — GND Digital ground reference

© Cambridge Technology 2014

Table 12 - Connector J16 (Control) Signal Descriptions

Odd-numbered Pins (1 – 19)	Even-numbered Pins (2 – 20)
AUX_READY Indicates that system is ready. — 11	12 — AUX_JOBACTIVE Asserted if a job is active but not necessarily marking yet (e.g., waiting on a trigger input).
AUX_BUSY Asserted when a BeginJob instruction is executed; de-asserted when an EndJob instruction is executed. — 13	14 — AUX_LASING Asserted when marking is in progress.
AUX_GPO0 A marking job instruction may specify the state of this signal. — 15	16 — AUX_GPO1 A marking job instruction may specify the state of this signal.
AUX_GPO2 A marking job instruction may specify the state of this signal. — 17	18 — AUX_GPO3 A marking job instruction may specify the state of this signal.
EXT_VCC5V0 5 Volts available for logic on customer board — 19	20 — GND Digital ground reference

4.2.8 External Trigger Pinouts (Connector J17)

The following figure contains the pinout drawing for Connector J17 (External Trigger).

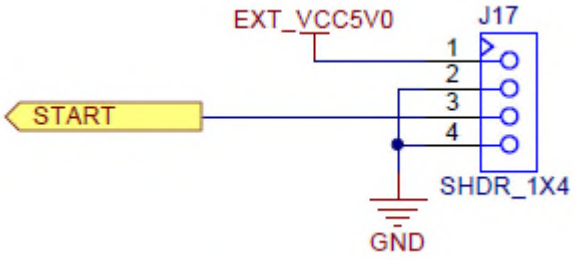

Figure 9 - Connector J17 (External Trigger) Pinouts

The following table contains a full description of the signal for each pin in the J17 Connector.

Table 13 - Connector J17 (External Trigger) Signal Descriptions

Pins 1 – 4	
EXT_VCC5V0 5 Volts available for logic on customer board	1
GND Digital ground reference	2
START A marking job may contain an instruction that pauses execution until this signal is asserted by external equipment. **Note:** This function can also be achieved using the AUX_START and AUX_START_ISO signals.	3
GND Digital ground reference	4

© Cambridge Technology 2014

4.2.9 Laser Signal Pinouts (Connector J18)

The following figure contains the pinout drawing for Connector J18 (Laser Signals).

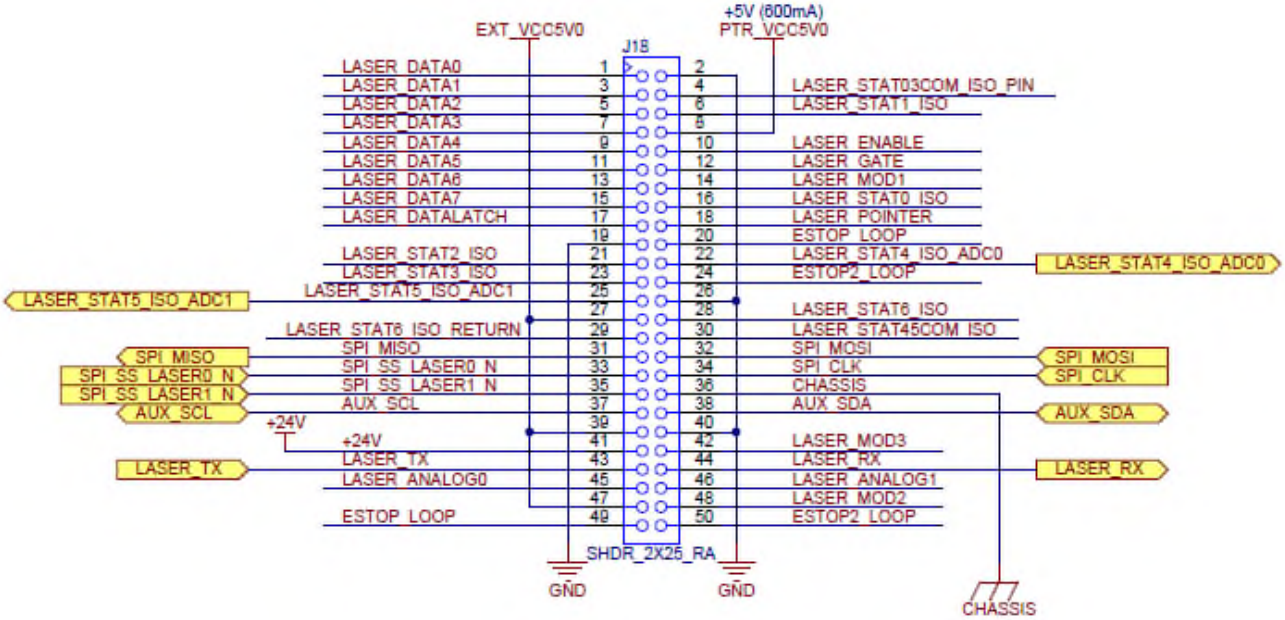

Figure 10 - Connector J18 (Laser) Pinouts

The following table contains a full description of the signal for each pin in the J18 Connector.

Table 14 - Connector J18 (Laser) Signal Descriptions

Odd-numbered Pins (1 – 49)	Even-numbered Pins (2 – 50)
LASER_DATA0 Digital data representing a laser power setting — 1	2 — GND Digital ground reference
LASER_DATA1 Digital data representing a laser power setting — 3	4 — LASER_STAT03COM_ISO_PIN Optical isolation common for status signals 0 - 3
LASER_DATA2 Digital data representing a laser power setting — 5	6 — LASER_STAT1_ISO General purpose status read back
LASER_DATA3 Digital data representing a laser power setting — 7	8 — PTR_VCC5V0 5 Volts available for laser pointer power
LASER_DATA4 Digital data representing a laser power setting — 9	10 — LASER_ENABLE Asserted a programmable time prior to a sequence of mark instructions; de-asserted after a programmable period of laser inactivity.
LASER_DATA5 Digital data representing a laser power setting — 11	12 — LASER_GATE Asserted when the laser is active.

Table 14 - Connector J18 (Laser) Signal Descriptions

Odd-numbered Pins (1 – 49)		Even-numbered Pins (2 – 50)	
LASER_DATA6 Digital data representing a laser power setting	13	14	LASER_MOD1 Programmable laser modulation or Q-switch pulse stream
LASER_DATA7 Digital data representing a laser power setting	15	16	LASER_STAT0_ISO General purpose status read back
LASER_DATALATCH Strobe signal asserted when the LASER_DATA[7..0] value changes.	17	18	LASER_POINTER Laser pointer control signal
GND Digital ground reference	19	20	ESTOP_LOOP Used to access laser interlock
LASER_STAT2_ISO General purpose status read back	21	22	LASER_STAT4_ISO_ADC0 Dual purpose pin for accessing digital status or an analog input
LASER_STAT3_ISO General purpose status read back	23	24	ESTOP2_LOOP Used to access laser interlock.
LASER_STAT5_ISO_ADC1 Dual purpose pin for accessing digital status or an analog input	25	26	GND Digital ground reference
EXT_VCC5V0 5 Volt source for use in laser signal conditioning circuitry	27	28	LASER_STAT6_ISO High-speed laser sync input
LASER_STAT6_ISO_RETURN Current return for LASER_STAT6	29	30	LASER_STAT45COM_ISO Optical isolator common for signals LASER_STAT4_ISO_ADC0 and LASER_STAT5_ISO_ADC1
SPI_MISO Reserved for future use	31	32	SPI_MOSI Reserved for future use
SPI_SS_LASER0_N Reserved for future use	33	34	SPI_CLK Reserved for future use
SPI_SS_LASER1_N Reserved for future use	35	36	CHASSIS Expected to be tied to earth ground
AUX_SCL Reserved for future use	37	38	AUX_SDA Reserved for future use
EXT_VCC5V0 5 Volt source for use in laser signal conditioning circuitry	39	40	GND Digital ground reference

© Cambridge Technology 2014

Table 14 - Connector J18 (Laser) Signal Descriptions

Odd-numbered Pins (1 – 49)	Even-numbered Pins (2 – 50)
+24V Connected to customer-supplied 24 volts on Connector J3 **NOTE:** Current limiting is not provided. — 41	42 — LASER_MOD3 Programmable laser modulation; used for first pulse suppression or programmable modulation source for synchronous operation.
LASER_TX Provided for configuration and status access to RS-232-equipped lasers — 43	44 — LASER_RX Provided for configuration and status access to RS-232-equipped lasers
LASER_ANALOG0 Normally mapped to the laser power setting; can be optionally made independent. — 45	46 — LASER_ANALOG1 Independent setting for laser power.
EXT_VCC5V0 5 Volt source for use in laser signal conditioning circuitry — 47	48 — LASER_MOD2 Programmable laser, 180 degrees phase shifted from LASER_MOD1
ESTOP_LOOP Used to access laser interlock — 49	50 — ESTOP2_LOOP Used to access laser interlock

4.2.9.1 ESTOP_LOOP Pinouts (Connector JP6)

The following figure contains the pinout drawing for Connector JP6. The ESTOP_LOOP pin on Connector JP6 goes to Pin 49 on Connector J18, as described in *Table 14 - Connector J18 (Laser) Signal Descriptions* on page 26.

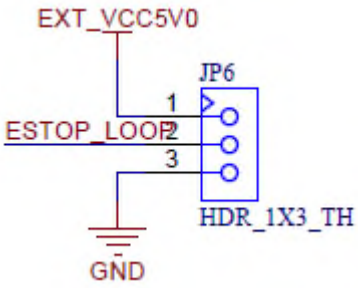

Figure 11 - Connector JP6 (ESTOP_LOOP)

The following table contains a full description of the signal for each pin in the JP6 Connector.

Table 15 - Connector J5 (ESTOP_LOOP) Signal Descriptions

Pins 1 – 3
EXT_VCC5V0 5 Volt source for optionally terminating ESTOP_LOOP — 1

Table 15 - Connector J5 (ESTOP_LOOP) Signal Descriptions

Pins 1 – 3	
ESTOP_LOOP Used to access laser interlock	2
GND Digital ground reference for optionally terminating ESTOP_LOOP	3

4.2.9.2 ESTOP2_LOOP Pinouts (Connector TP99)

The following figure contains the pinout drawing for Connector TP99. The ESTOP2_LOOP pin on Connector JP6 goes to Pin 50 on Connector J18, as described in *Table 14 - Connector J18 (Laser) Signal Descriptions* on page 26.

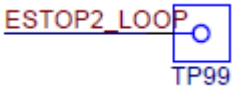

Figure 12 - Connector TP99 (ESTOP2_LOOP)

© Cambridge Technology 2014

4.2.10 USBA Pinouts (Connector J5)

The following figure contains the pinout drawing for the standard USBA Connector J5.

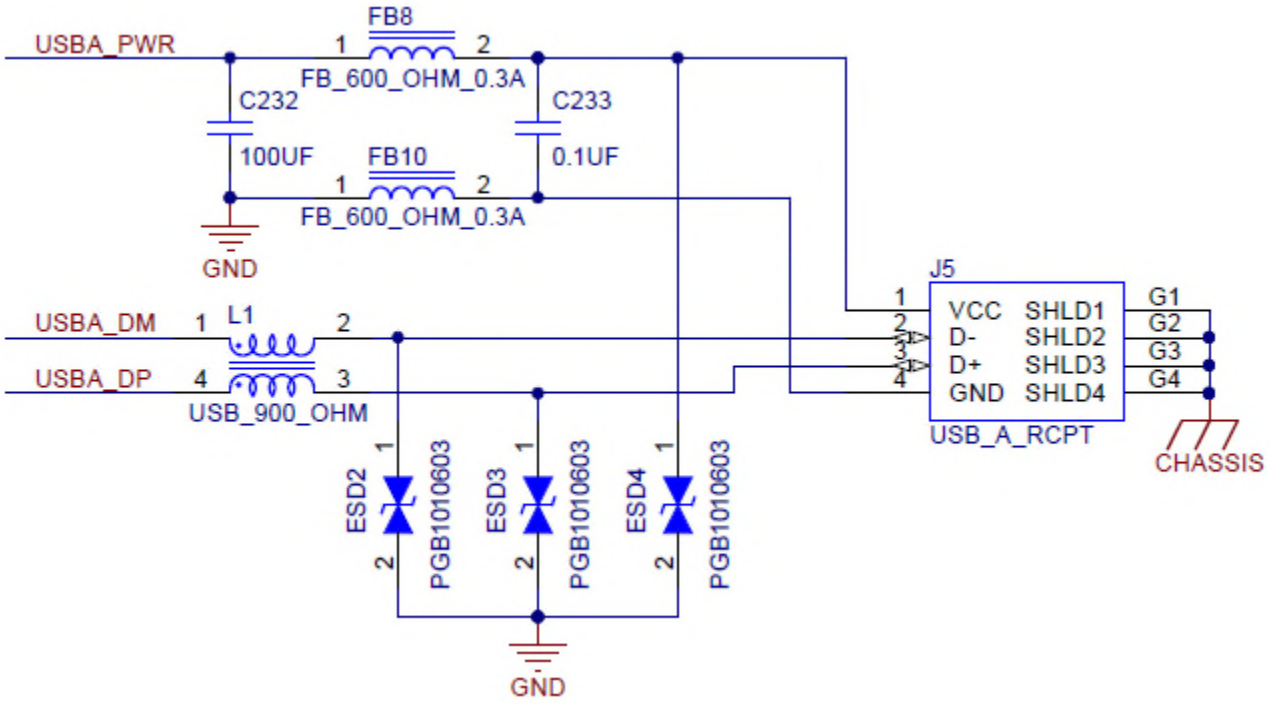

Figure 13 - Connector J5 (USBA Pinouts)

The following table contains a full description of the signal for each pin in the J5 Connector.

Table 16 - Connector J5 (USBA Header) Signal Descriptions

Pins 1 – 5	
USBA_PWR Standard USB power pin	1
USBA_DM Standard USB data minus	2
USBA_DP Standard USB data plus	3
GND Standard USB Ground	4

4.2.11 USBB Header Pinouts (Connector J6)

The following table contains the pinout drawing for the optional Connector J6 (USBB Header).

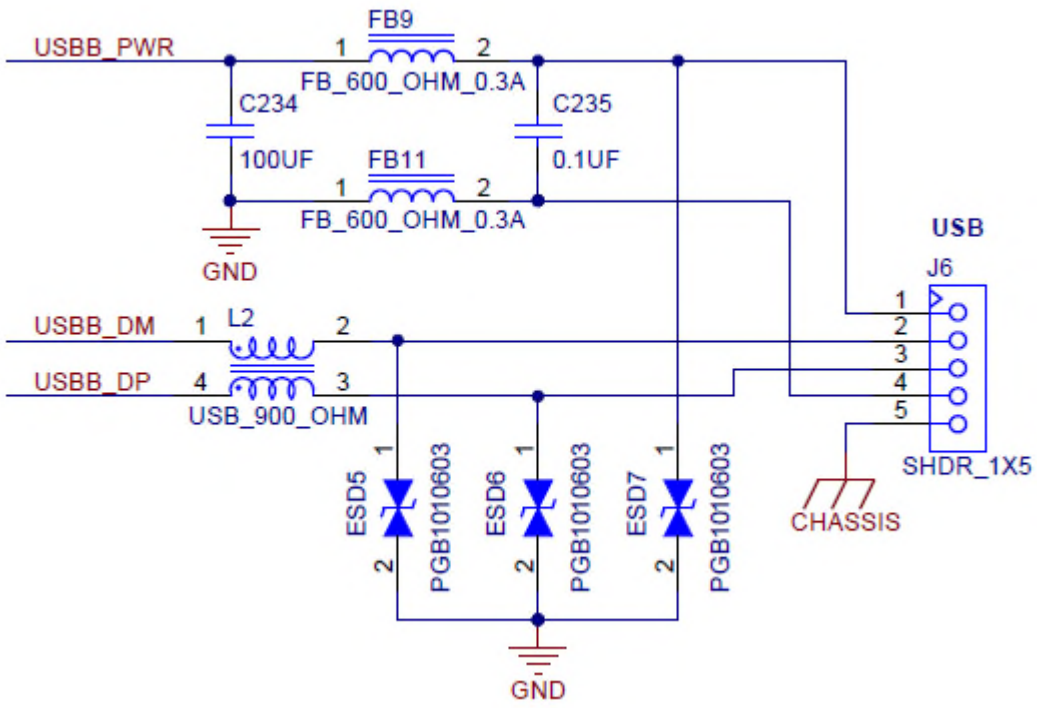

Figure 14 - Connector J6 (USBB Header) Pinouts

The following table contains a full description of the signal for each pin in the J6 Connector.

Table 17 - Connector J6 (USBB Header) Signal Descriptions

Pins 1 – 5	
USBB_PWR Standard USB power pin	1
USBB_DM Standard USB data minus	2
USBB_DP Standard USB data plus	3
GND Standard USB Ground	4
CHASSIS Expected to be tied to earth ground	5

© Cambridge Technology 2014

4.3 Signal Conditioning

The following figures illustrate the signal conditioning for the various signal groups of the SMC.

4.3.1 Mark-on-the-Fly Inputs – J14 and J15

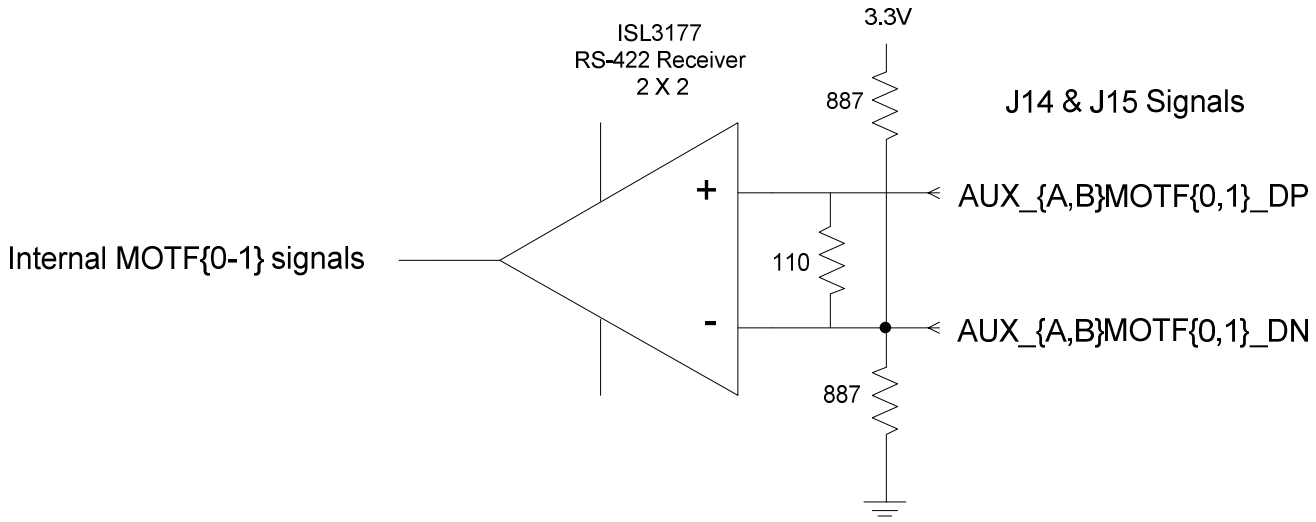

Figure 15 - Signal Conditioning for Mark-on-the-Fly Inputs (J14 and J15)

4.3.2 High-speed Laser Synchronization – J18

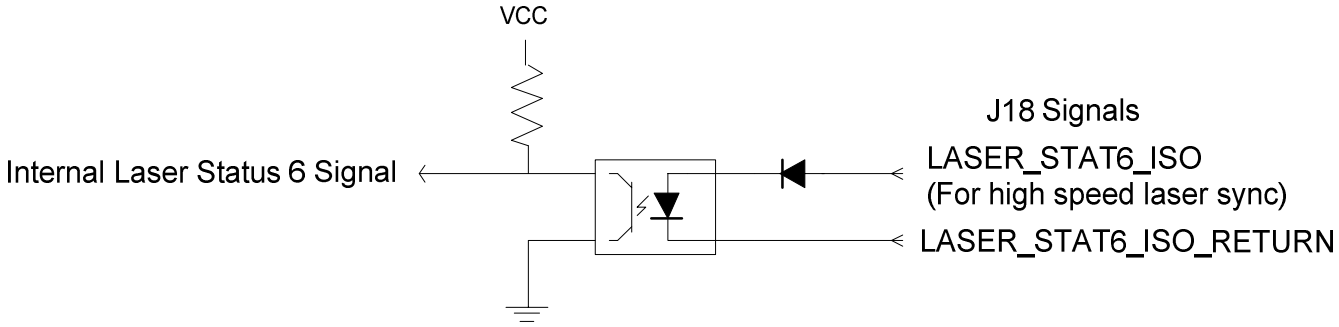

Figure 16 - Signal Conditioning for High-speed Laser Synchronization (J18)

4.3.3 Laser Status 0-5 Signals – J18

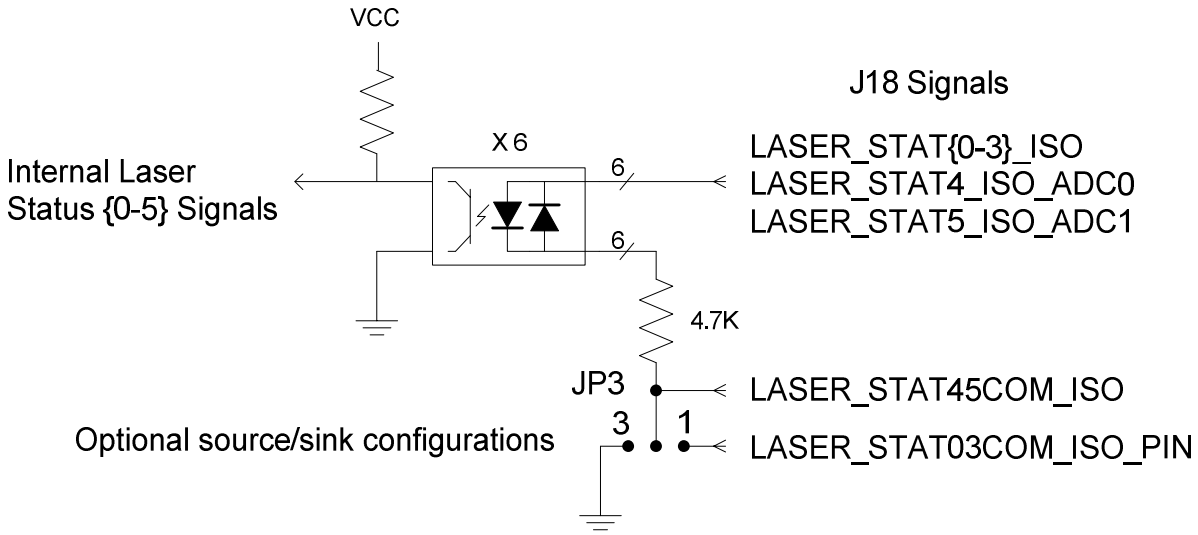

Figure 17 - Signal Conditioning for Laser Status 0-5 Signals (J18)

4.3.4 General Purpose Inputs – J13 and J16

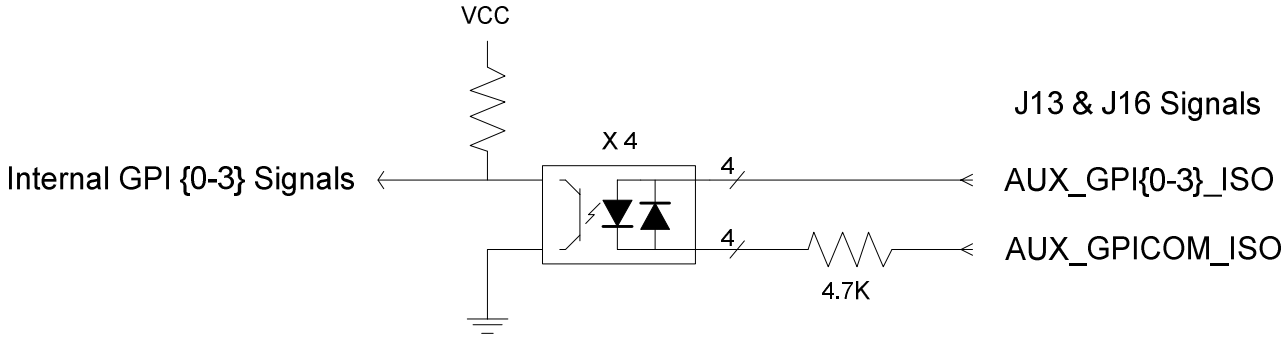

Figure 18 - Signal Conditioning for General Purpose Inputs (J13 and J16)

© Cambridge Technology 2014

4.3.5 System Control Inputs – J13 and J16

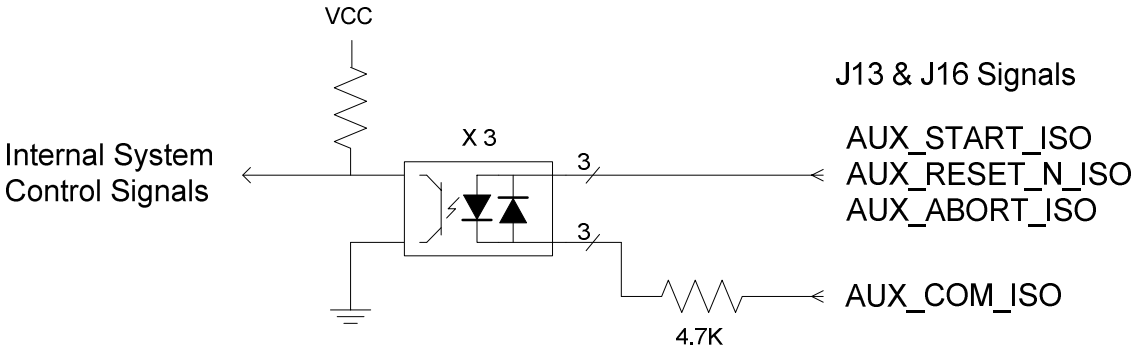

Figure 19 - Signal Conditioning for System Control Inputs (J13 and J16)

4.3.6 START Input – J17 and J15

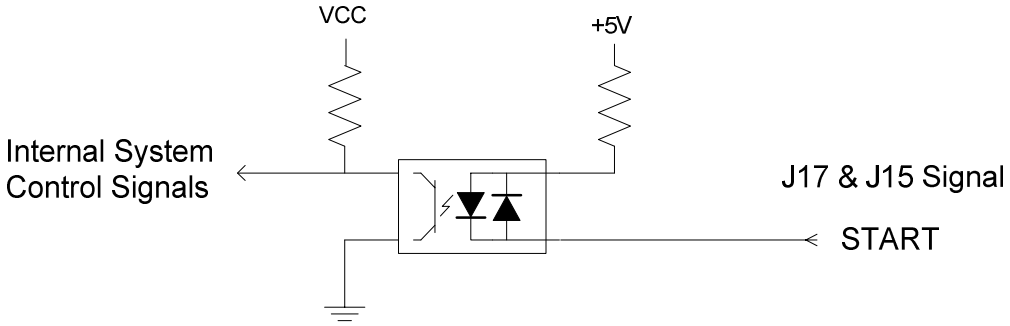

Figure 20 - Signal Conditioning for START Input (J17 and J15)

4.3.7 System Control Outputs and General Purpose Outputs – J13 and J16

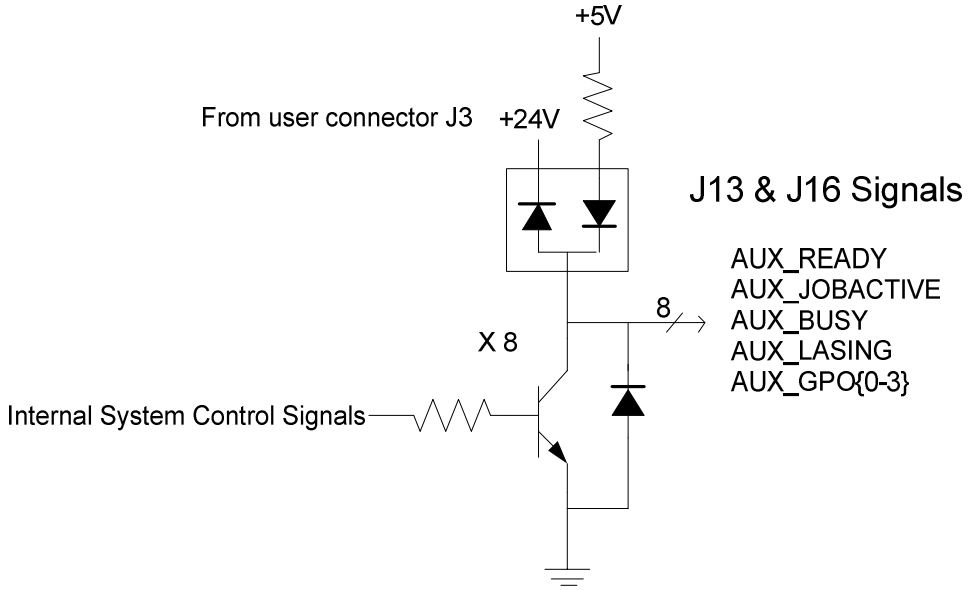

Figure 21 - Signal Conditioning for System Control and General Purpose Outputs (J13 and J16)

4.3.8 Laser Control Outputs – J18

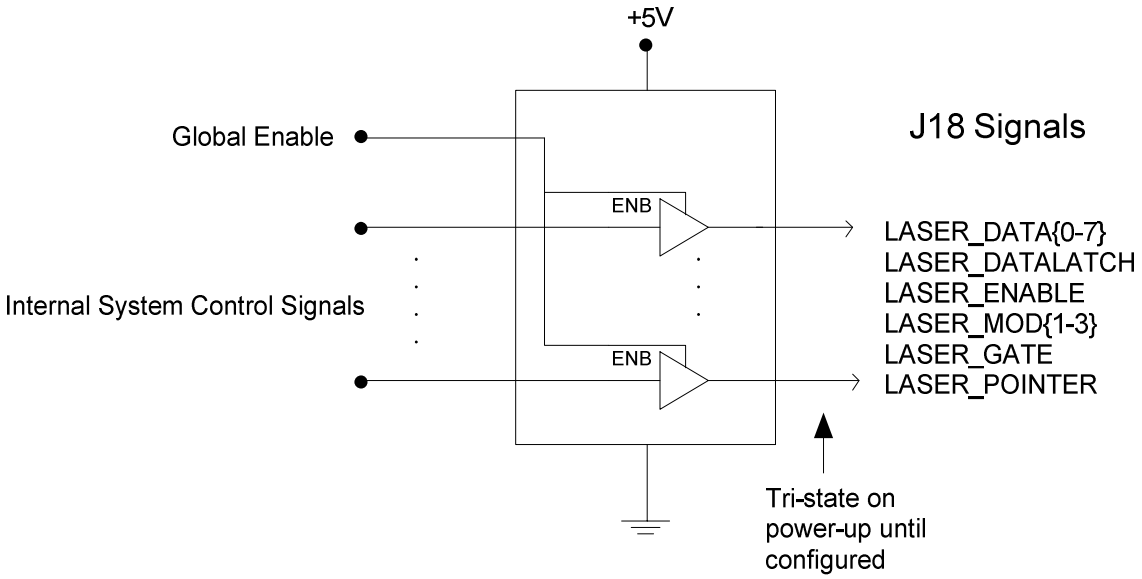

Figure 22 - Signal Conditioning for Laser Control Outputs (J18)

4.3.9 Auxilliary XY2-100 Signals – J13

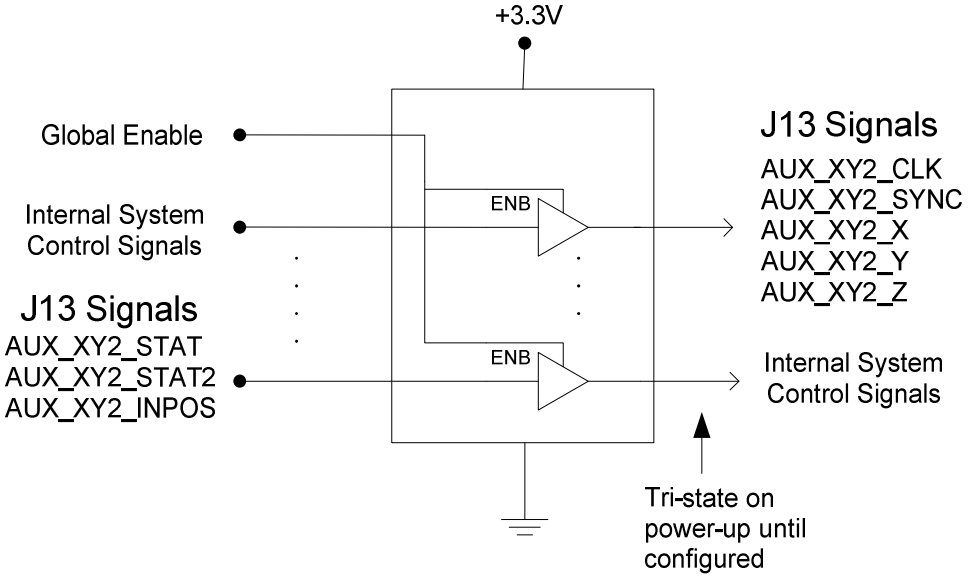

Figure 23 - Signal Conditioning for Auxilliary XY2-100 Signals (J13)

© Cambridge Technology 2014

4.4 XY2-100 Protocol Interface

The XY2-100 Serial Link (also known as Serial Link 1 and XYZ-100) is a synchronous TIA/EIA-422-B differential digital interface for communication of three 16-bit position words and a single 16-bit status word for 2- and 3-Axis servo applications.

4.4.1 Connections and Signal Descriptions

Typically, a female connector is used by a position data receiver such as a scan head, and may optionally include differential power as shown in *Table 18 - DB-25 Connector to an XY2-100-based Scan Head* (below). However, this power distribution is not supported by the SMC.

Signaling is differential 3.3-5V TIA/EIA-422-B. Sync and data are sampled on the falling edge of the clock and must observe a 50ns setup and 50ns hold. The voltage of a logical "1" is V+LINE >V-LINE.

Table 18 - DB-25 Connector to an XY2-100-based Scan Head

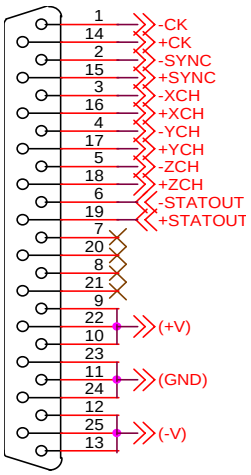	XY2-100: DB-25 CK: clock, 2MHz nominal SYNC: indicates start of 20-bit data word XCH: 20-bit X-axis data send YCH: 20-bit Y-axis data send ZCH: 20-bit Z-axis data send STATOU1T: 20-bit status return V+: +15V to +24V (not supplied by SMC) GND: Common reference for V+ and V- V-: -15V to -24V (not supplied by SMC)

4.4.2 Clock

The Clock is transmitted by the position data generator, 20 cycles per frame. Its nominal frequency is 2MHz.

4.4.3 Sync

The frame Sync is a single logical "0" pulse, once per frame, transmitted by the position data generator one clock cycle prior to the first bit of the frame.

4.4.4 X, Y, & Z Data

The X, Y, & Z Data are three 20-bit serial data streams consisting of a 3-bit control code, one 16-bit position word (unsigned, MSB first), and a parity bit (even parity).

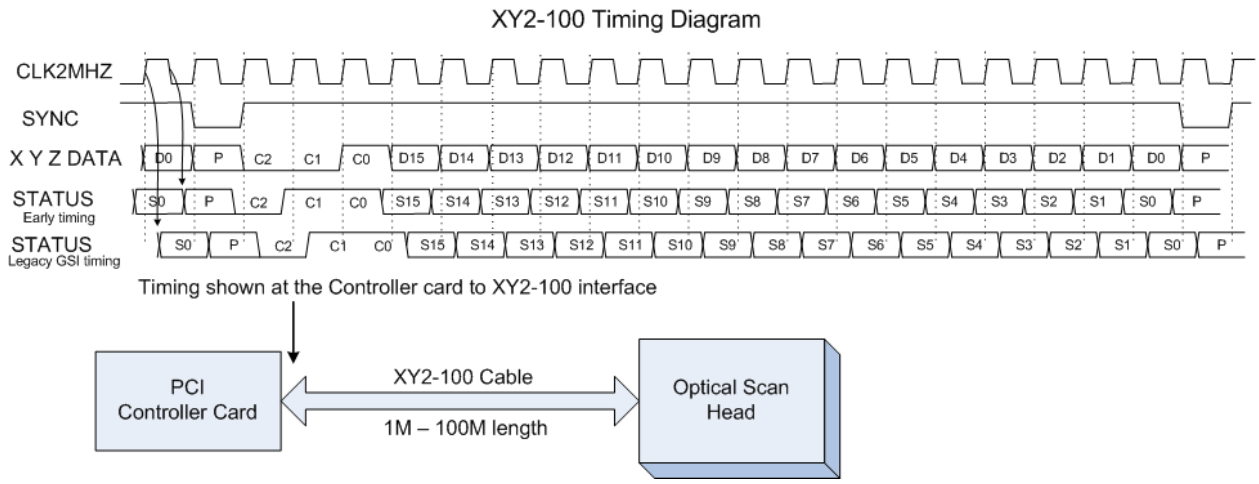

Figure 24 - X2-100 Timing Diagram

Improper control codes, parity error, or a missing sync on the 21st clock cycle will cause the position data word for the affected channel to be discarded. As the following table shows, 001 is the only supported control code.

Table 19 - Control Codes

Control Bits [2:0]	Function
0 0 0	Reserved
0 0 1	16-bit position data follows
0 1 0	Reserved
0 1 1	Test (reserved)
1 x x	18-bit Serial Link 2 data follows (odd parity, reserved)

© Cambridge Technology 2014

4.4.5 Status Data

The Status Data is a 20-bit serial data stream consisting of a 3-bit control code, one 16-bit status word, and a parity bit (even parity). The SMC latches the Status received from the Scan Head on the falling edge of the 2MHz CLK.

The SMC also generates Even Parity on 2-Axis status. Both formats are shown in the following table.

Table 20 - Status Data Formats

Bit	2-axis status	3-axis status
C2	0	0
C1	1	0
C0	1	1
S15	Power Status	X Error Status (X Servo Ready)
S14	Temperature Status	X Temperature Status
S13	In-field	X Tracking Error
S12	X Position Acknowledge	0
S11	Y Position Acknowledge	Y Error Status (Y Servo Ready)
S10	1	Y Temperature Status
S9	0	Y Tracking Error
S8	1	0
S7	Power Status	Z Error Status (Z Servo Ready)
S6	Temperature Status	Z Temperature Status
S5	In-field	Z Tracking Error
S4	X Position Acknowledge	0
S3	Y Position Acknowledge	Serial Link X Parity Error
S2	1	Serial Link Y Parity Error
S1	0	Serial Link Z Parity Error
S0	1	Serial Link Clock Error
Par	x (no parity)	even parity

THIS PAGE IS INTENTIONALLY LEFT BLANK.

© Cambridge Technology 2014